Brookhaven

3/4” wall stop valve

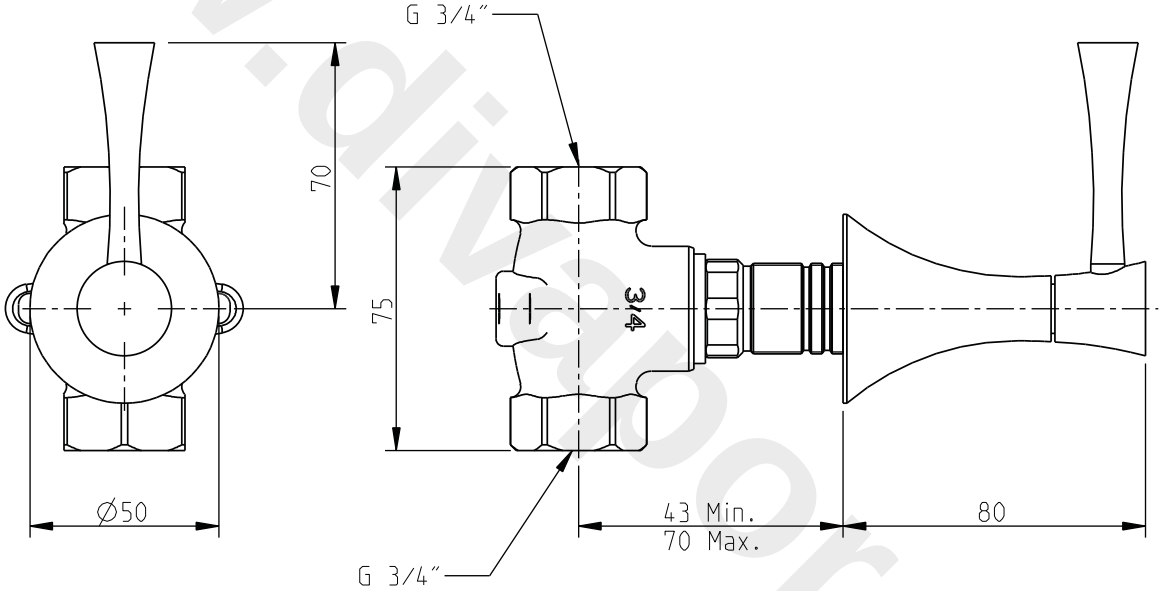

www.divapor.com

code: 32217BS-xxx.U

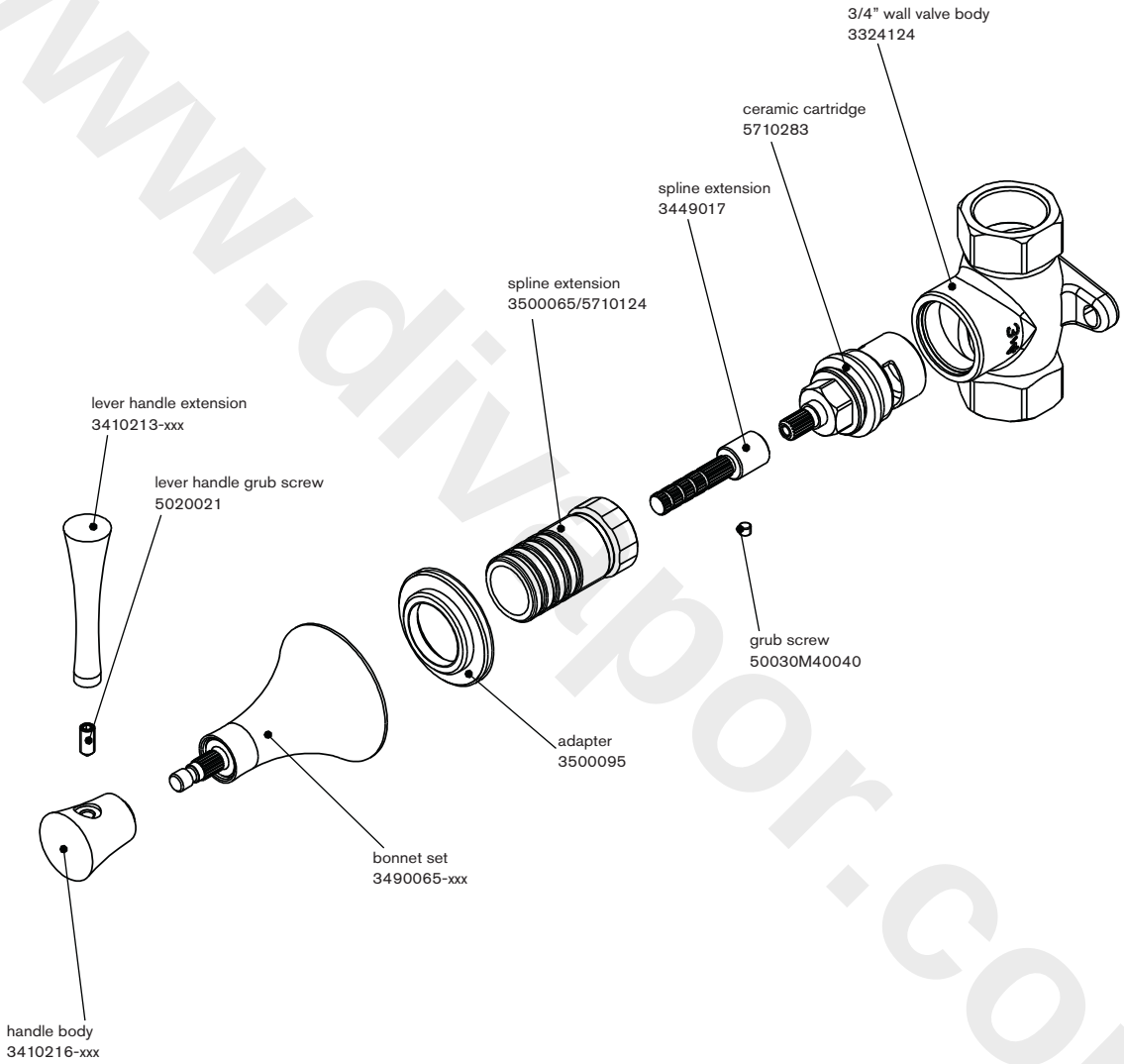

www.divapor.com

Notes:
xxx represent different finishes

Installer: Please leave all leaflets with the building owner to file for future reference

5665442
983BS000U00